SALES & ENGINEERING DATA

RATIO SERIES:	1:1
FLUID PSI RANGE:	20 – 120

6662A3–XXX–C THRU 6662B4–XXX–C

2” NON–METALLIC DIAPHRAGM PUMP

RELEASED: 1–31–97
REVISED:
S–877

DIMENSIONAL DATA

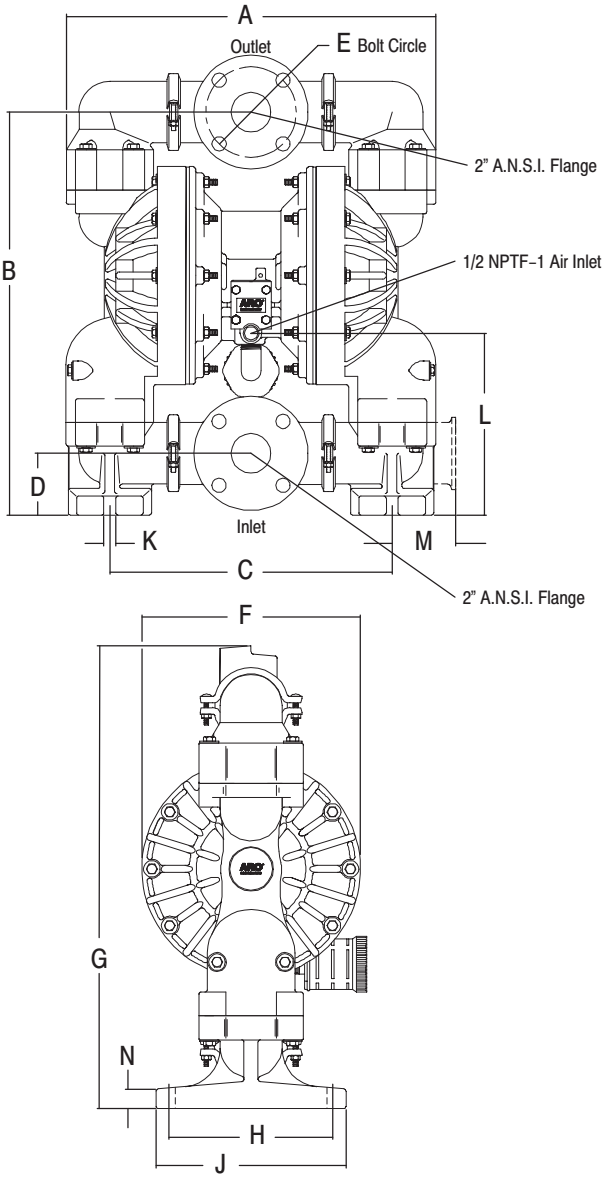

DIMENSIONS

A	19–1/2 (495)	F	11–1/2 (292)	K	5/8 (16)
B	21–5/16 (541)	G	24–1/2 (622)	L	9–5/8 (244)
C	14–15/16 (379)	H	9 (229)	M	3–3/8 (86)
D	3–1/4 (83)	J	10–1/16 (256)	N	1–1/16 (27)
E	4–3/4 (121)				

NOTE: Dimensions are shown in inches and (mm), supplied for reference only and are typically rounded up to the nearest 1/16 inch.

SPECIFICATIONS

CONSTRUCTION

Model Series . . . . . 6662A3–XXX–C thru 6662B4–XXX–C
Pump Type . . . . . Non–Metallic, Air Operated, Double Diaphragm
Ratio 1:1
Material Inlet / Outlet . . . . . 2” A.N.S.I. Class 150 Flange
Air Inlet . . . . . 1/2” NPTF–1(f)
Air Exhaust . . . . . 3/4” NPTF–1(f)
Weight . . . . . Polypropylene – 62 lbs (28 kgs)
Kynar (PVDF) – 92 lbs (42 kgs)
(add 23 lbs (10.4 kgs) for cast iron air motor section)
Air Section Service Kit 637118–C
Fluid Section Service Kit . . . 637165–XX

6662A3 – X X X –C
637165 – X X
Diaphragm Material
Ball Material

EXAMPLE: Model 6662A3–344–C
Fluid Section Service Kit is 637165–44

PERFORMANCE

Air Inlet Pressure Range . . . . . 20 – 120 PSI (1 – 8.3 bar)
Fluid Pressure Range . . . . . 20 – 120 PSI (1 – 8.3 bar)
Max. Flow Rate (Flooded Inlet) . . . . 145 g.p.m. (549 l.p.m.)
Max. Particle Size . . . . . 1/4” dia. (6.4 mm)
Max. Temperature Limits
Polypropylene . . . . . 35° to 150°F (2° to 66°C)
Kynar (PVDF) . . . . . 10° to 200°F (–12° to 93°C)
Displacement / Cycle @ 100 psi: 0.72 gal (2.7 l)
Noise Level @ 70 Psi – 60 Cpm① 77.7 db(A)②

Notes:
① Tested with 93139 Muffler installed.
② The pump sound pressure level has been updated to an Equivalent Continuous Sound Level (L_{Aeq}) to meet the intent of ANSI S1. 13–1971, CAGI–PNEUROP S5.1 using four microphone locations.

ACCESSORIES:

65010 Neoprene “O” Ring Air Motor Kit
65764 Viton “O” Ring Air Motor Kit
66084–1 Air Line Kit

ARO®
INGERSOLL–RAND COMPANY
ONE ARO CENTER • BRYAN, OHIO 43506–0151
✆ (419) 636–4242 • FAX (419) 633–1674

©1997 • PRINTED IN U.S.A.

INGERSOLL-RAND
FLUID PRODUCTS

PERFORMANCE CURVES
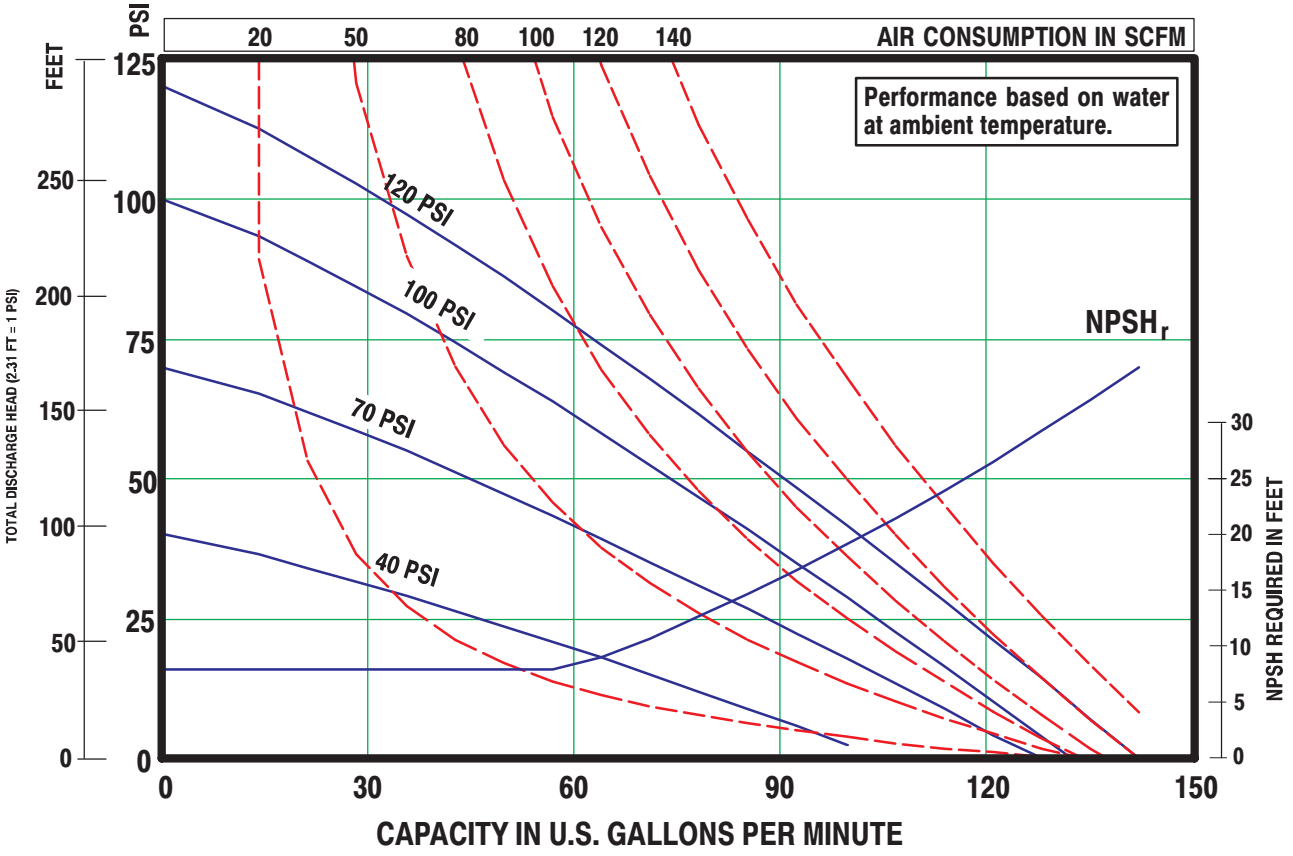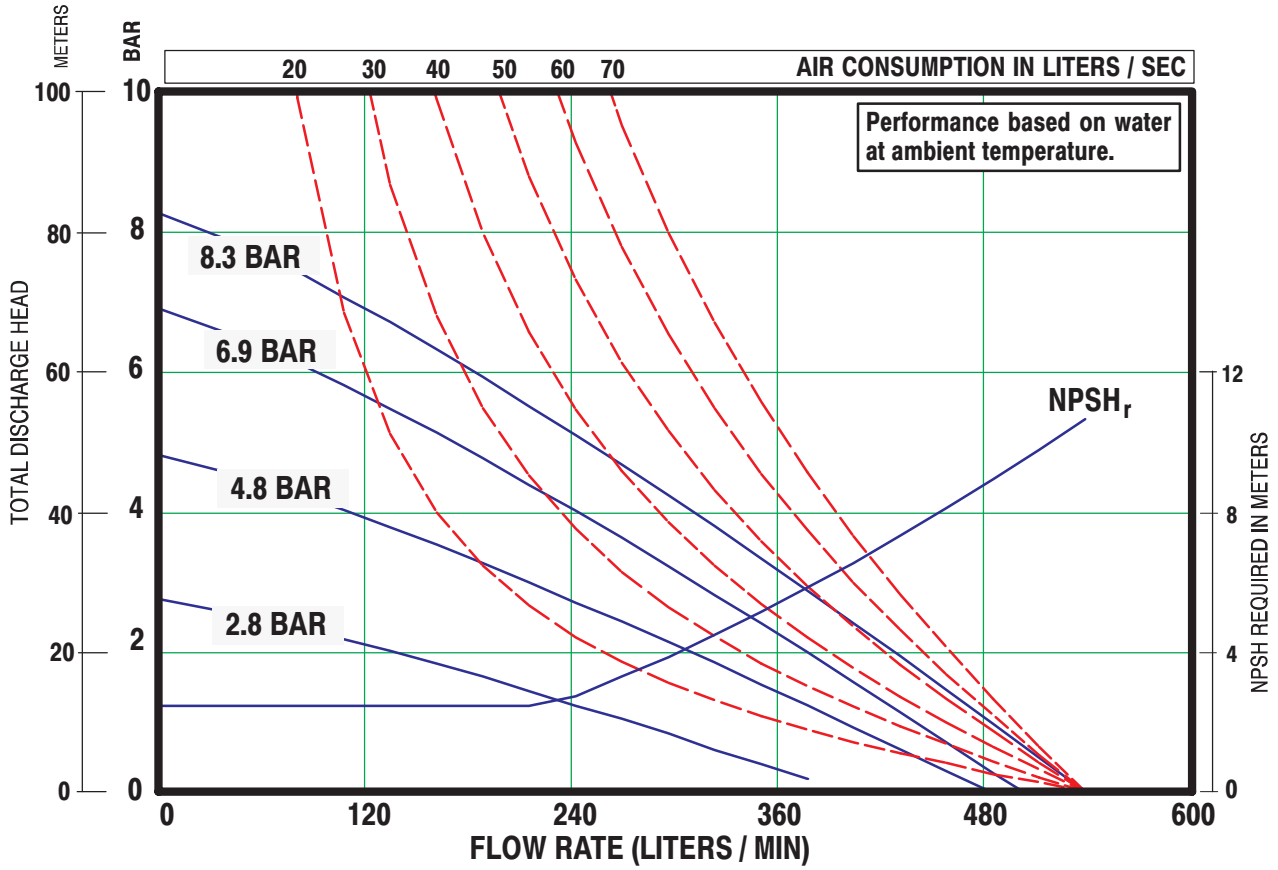
6662XX-XXX-C 2" NON-METALLIC DIAPHRAGM PUMP